599 Menlo Drive, Suite 100
Rocklin, California 95765, USA
Office: (916) 624-8333
Fax: (916) 624-8003

General: info@parallax.com
Technical: support@parallax.com
Web Site: www.parallax.com
Educational: www.stampsinclass.com

Boe-Bot Tank Treads (#28106)

Treaded Addition for the Boe-Bot

Introduction

Treads let the Boe-Bot to access more varied terrain such as carpet, small rocks or imperfect surfaces. This kit involves the removal of the Boe-Bots wheels and addition of a treaded drive train.

Packing List

Verify the contents of your Boe-Bot Tank Tread App Kit to include:

- Documentation
- (2) metal sides – 720-28106
- (1) Plastic wheel set and (1) Rubber tread set – 721-28106
- (2) Servo horn (standard or disk) - 725-00013
- (8) 4-40 Machine Screws, 1/4" – 700-00028
- (6) 4-40 Machine Screws, 3/8" – 700-00002
- (8) 4-40 Machine Screws, 7/8" – 700-00007
- (22) 4-40 Nut – 700-00003
- (2) 1.5" screw – 710-00008
- (2) 1.25" standoff – 713-00003

If any parts are missing contact Parallax immediately for replacements.

Tools Needed

You will need a Philips screw driver, wrench and a 3/32" drill (or Exacto type knife).

Assembly

From the set of wheels cut out the following and trim off any burs:

- (2) large wheels (with teeth)
- (2) large wheels (no teeth)
- (6) medium sized wheels (no teeth)

The remaining wheels are not used.

The servo horn will need four of the holes enlarged for the 4-40 screws. The holes need to be smaller than the screw so that when the screws are inserted they will make their own threads. You can drill the holes using a 3/32" drill bit or use an X-acto knife to enlarge the holes as shown in figures 1 and 2 If you are using the knife be sure not to over enlarge the holes. By reaming with the knife a little from the top and bottom, the hole will be more uniform in size.

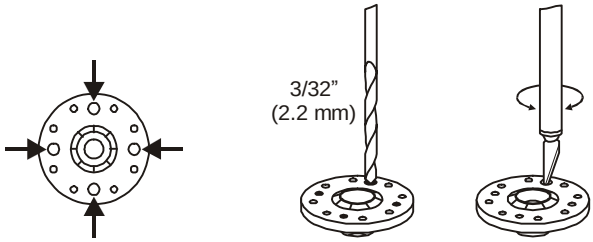

Figure 1: Modify Disk Horn with Drill or Knife

Modify the disk servo horn by drilling or reaming the middle holes larger. If using a knife ream from the top and bottom but leave material for threads to be made.

Wire cutters work well for trimming off the servo horn ends.

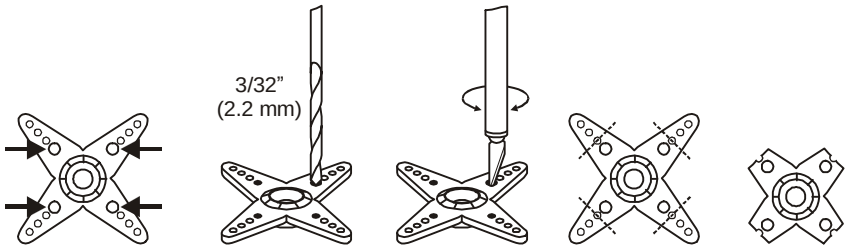

Figure 2: Modify Standard Servo Horn with Drill or Knife

Modify the standard servo horn by drilling or reaming the inner holes larger. If using a knife ream from the top and bottom but leave material for threads to be made.

Using the ¼" screws attach the two large wheels (with teeth) to the servo horns as shown in Figure 3.

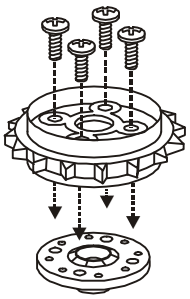

Figure 3: Mounting the Wheel to Servo Horn

Mounting the wheel with teeth to the servo horn with ¼" screws.

Attach the 7/8” screws and nuts to the remaining wheels as shown and set aside. See Figure 4.

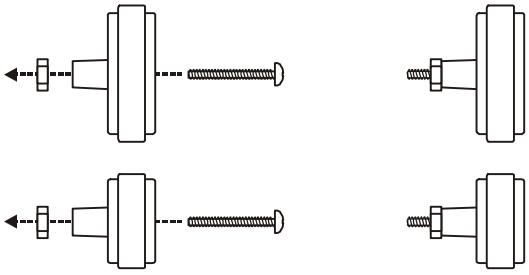

Figure 4: Attach 7/8” Screws to Wheels

Attaching the 7/8” screws to the wheels (2 large and 6 medium in size).

Remove the wheels from your Boe-Bot. The servos should be mounted with the head toward the rear ball wheel as in Figure 5.

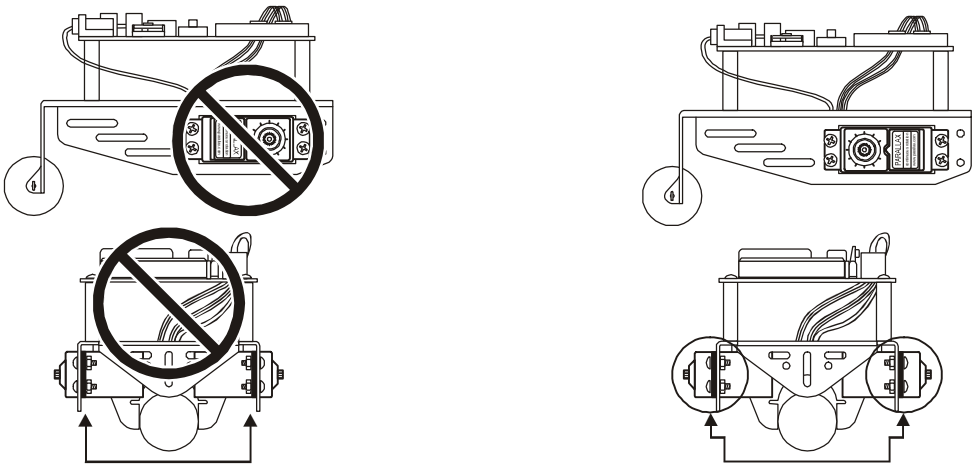

Figure 5: Servos are Mounted on the Outside of the Chassis

Confirm that the servos are mounted correctly.

If your servos are mounted the opposite way, remove them and remount as shown. Attach the sides using 3/8″ screws and nuts. Then attach the servo horn (with wheel) using the screw that came with the servo. See Figure 6.

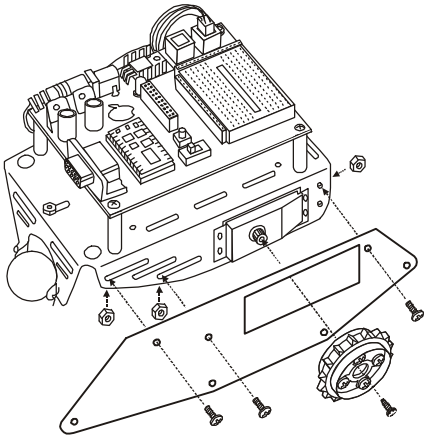

Figure 6: Attach Sides with 3/8″ Screws and Attach Servo Horn with Wheel

Attach the remaining wheels by first tightening the nut on the wheel then loosening it a ¼ -1/3 a turn. Mount with a nut on each side of the frame. When the two nuts on each wheel are tightened, check to see that the wheel and outside nut has a small gap to allow for easy rolling. See Figure 7.

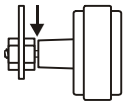

Figure 7: Mount Roller Wheels

When mounting the wheels make sure there is a small gap between the wheel and the nut so the wheel can roll easily. Leave a small gap so the wheel can turn freely. Mount the remaining wheels shown in Figure 8.

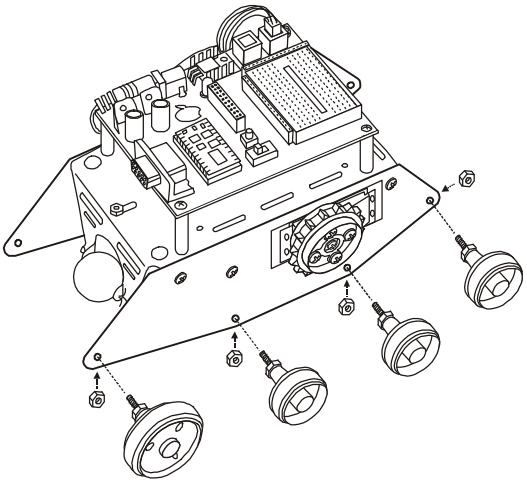

Figure 8: Mount the Remaining Wheels with 3/8″ Screws

Separate all the rubber tread pieces and connect together as shown in Figure 9.

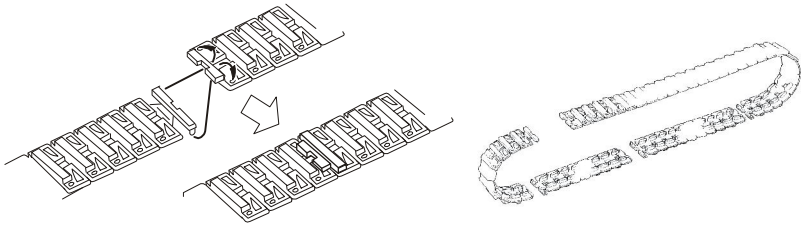

Figure 9: Connect the Tread Links

Each loop contains 1 long, 2 medium and 2 short treads.

Check each wheel to make sure it rolls without binding. If any wheels bind, loosen the nut and remount to maintain a small gap between the wheel and nut. Stretch the tread over the wheels and the assembly is done.

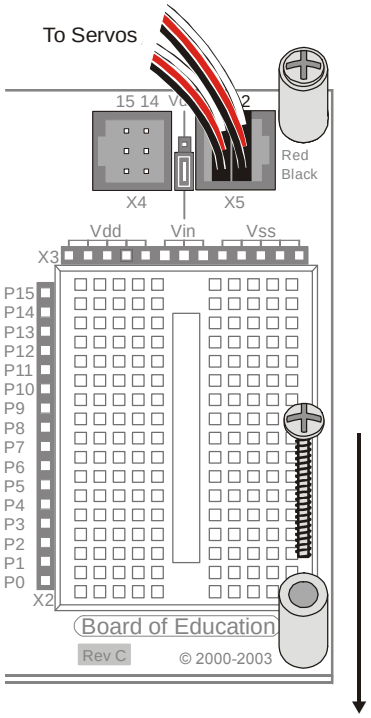

Figure 10: Installing the Standoff "Protectors"

The Boe-Bot's breadboard circuit can be protected by installing (2) 1.5" screws and (2) 1.25" spacers on the front of the Board of Education.

Application with the Memsic 2125 Accelerometer Chip

The Memsic 2125 dual-channel accelerometer can be used with your Boe-Bot Tank Tread kit to keep the Boe-Bot from flipping over when it encounters very uneven terrain.

Parts Required

This project requires the Boe-Bot Full Kit, Memsic 2125 Accelerometer and the Boe-Bot Tank Tread Kit. Specifically, you will be adding the following components to your Board of Education:

- (2) Infrared transmitter assemblies (#350-00017)
- (2) Infrared receivers (#350-00014)
- (2) 1K ohm resistor 1/4 watt (#150-01020)
- 220 ohm resistor 1/4 watt (#150-02210)
- (1) Memsic 2125 Dual-axis Accelerometer (#28017)

Wiring Diagram and Pictorial

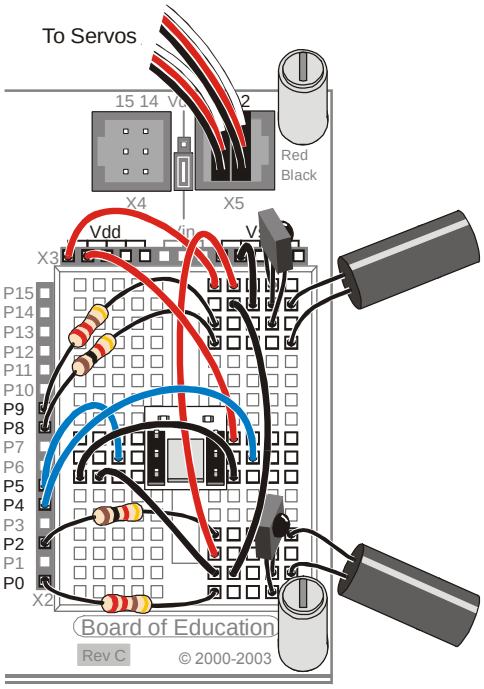

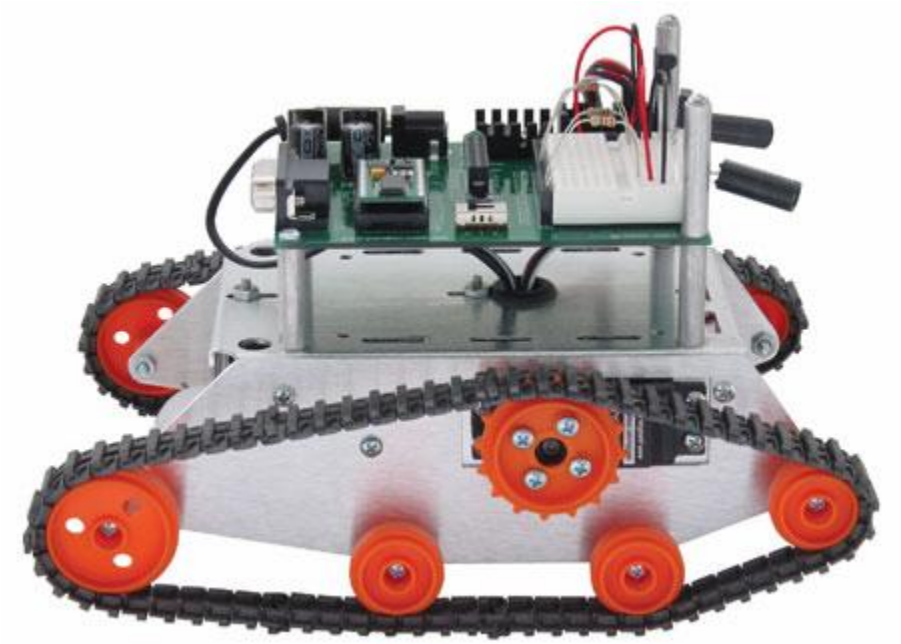

Schematic

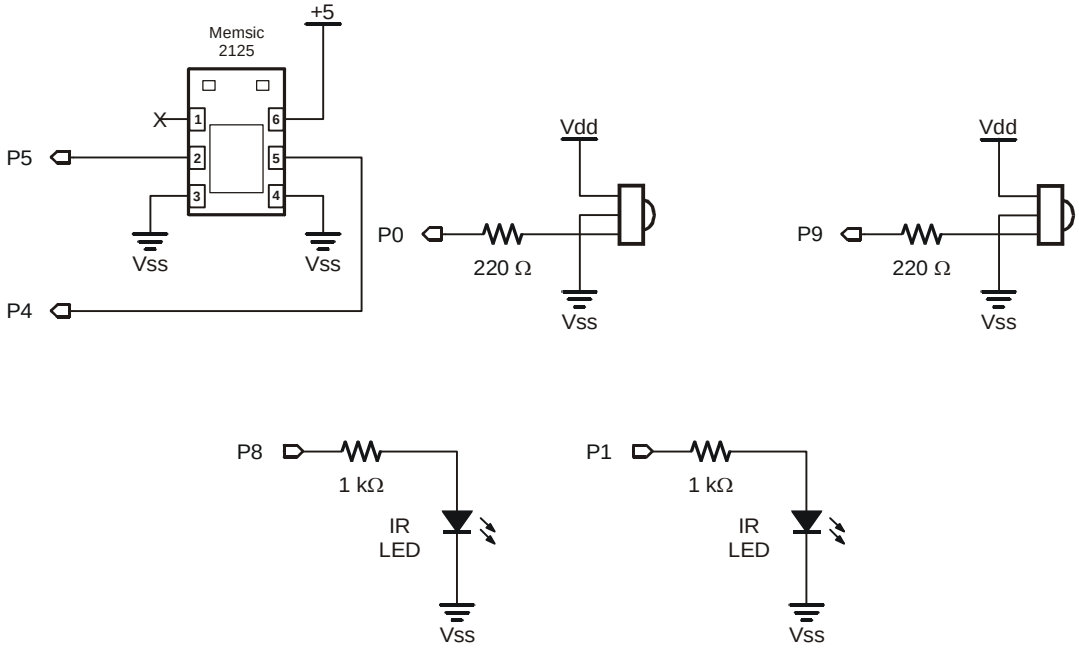
Memsic
2125
+5
X
1
2
3
6
5
4
P5
P4
Vss
Vss
Vdd
P0
220 Ω
Vss
Vdd
P9
220 Ω
Vss
P8
1 kΩ
IR
LED
Vss
P1
1 kΩ
IR
LED
Vss

Stamp Code

```
' =========================================================================
'
'   File...... Advanced_Tank_Bot.BS2
'   Purpose... Tank Bot with Tilt Sensing
'   Author.... Parallax
'   E-mail.... support@parallax.com
'   Started...
'   Updated... 12 APRIL 2004
'
'   {$STAMP BS2}
'   {$PBASIC 2.5}
'
' =========================================================================


' -----[ Program Description ]---------------------------------------------
'
' This program incorporates the Memsic 2125 accelerometer into the BOE-Bot
' tank kit to allow the tank to exlore uneven terrain without tipping over.


' -----[ Revision History ]------------------------------------------------


' -----[ I/O Definitions ]-------------------------------------------------

LfIrOut         PIN     8                       ' left IR LED output
LfIrIn          PIN     9                       ' left IR sensor input
RtIrOut         PIN     1                       ' right IR LED output
RtIrIn          PIN     0                       ' right IR sensor input

LMotor          PIN     13                      ' left servo motor
RMotor          PIN     12                      ' right servo motor

TiltX           PIN     4                       ' X tilt input
TiltY           PIN     5                       ' Y tilt input


' -----[ Constants ]-------------------------------------------------------

LFwd            CON     1000                    ' left motor forward
LStop           CON      750                    ' left motor stop
LRev            CON      500                    ' left motor reverse

RFwd            CON      500                    ' right motor forward
RStop           CON      750                    ' right motor stop
RRev            CON     1000                    ' right motor reverse

IsHigh          CON     1                       ' high-going pulse
IsLow           CON     0                       ' low-going pulse

YThresh         CON     20                      ' Y tilt threshold


' -----[ Variables ]-------------------------------------------------------

pulses          VAR     Byte                    ' counter for servo control
```

```
irBits          VAR     Nib                     ' ir detection bits
irLeft          VAR     irBits.BIT1             ' left IR detection
irRight         VAR     irBits.BIT0             ' right IR detection
xAxis           VAR     Word                    ' x-axis tilt reading
yAxis           VAR     Word                    ' y-axis tilt reading


' -----[ EEPROM Data ]-----------------------------------------------------


' -----[ Initialization ]--------------------------------------------------

Reset:
  LOW LMotor                                    ' initialize motor outputs
  LOW RMotor


' -----[ Program Code ]----------------------------------------------------

Main:
  DO
    GOSUB Check_Level                           ' verify terrain okay

    ' navigate around obstacles

    GOSUB Read_IR_Sensors
    ON irBits GOSUB Forward, Go_Left, Go_Right, U_Turn
  LOOP

  END


' -----[ Subroutines ]-----------------------------------------------------

Check_Level:
  PULSIN TiltY, IsHigh, yAxis                   ' check longitudinal tilt
  yAxis = yAxis / 100                           ' filter reading
  IF (yAxis =< YThresh) THEN                    ' if terrain too steep
    GOSUB U_Turn                                ' ... and turn around
  ENDIF
  RETURN


Read_IR_Sensors:
  irBits = %00
  FREQOUT LfIrOut, 1, 38500                     ' modulate left IR LED
  irLeft = ~LfIrIn                              ' read input (1 = target)
  FREQOUT RtIrOut, 1, 38500                     ' modulate right IR LED
  irRight = ~RtIrIn                             ' read input (1 = target)
  RETURN


Forward:                                        ' move tank forward
  FOR pulses = 1 TO 5
    PULSOUT LMotor, LFwd
    PULSOUT RMotor, RFwd
    PAUSE 20
  NEXT
  RETURN
```

```
Go_Left:                                          ' turn to left
  FOR pulses = 1 TO 15
    PULSOUT LMotor, LStop
    PULSOUT RMotor, RFwd
    PAUSE 20
  NEXT
  RETURN


Go_Right:                                         ' turn to right
  FOR pulses = 1 TO 15
    PULSOUT LMotor, LFwd
    PULSOUT RMotor, RStop
    PAUSE 20
  NEXT
  RETURN


U_Turn:                                           ' turn around
  IF (yAxis > YThresh) THEN
    GOSUB Back_Up                                 ' back-up if flat terrain
  ENDIF
  PULSIN TiltX, IsHigh, xAxis                     ' check longitudinal tilt
  xAxis = xAxis / 100                             ' filter reading
  IF (xAxis < 24) THEN                            ' turn left
    FOR pulses = 1 TO 60
      PULSOUT LMotor, LRev
      PULSOUT RMotor, RFwd
      PAUSE 20
    NEXT
  ELSE                                            ' turn right
    FOR pulses = 1 TO 60
      PULSOUT LMotor, LFwd
      PULSOUT RMotor, RRev
      PAUSE 20
    NEXT
  ENDIF
  RETURN


Back_Up:                                          ' back up a bit
  FOR pulses = 1 TO 10
    PULSOUT LMotor, LRev
    PULSOUT RMotor, RRev
    PAUSE 20
  NEXT
  RETURN
```