ELECTRIC DOUBLE LAYER CAPACITOR – GOLD CAPACITOR

Suntan®

TS12S-M

FEATURES

Radial & Snap-in type
large capacity, VENT case.

S P E C I F I C A T I O N S	
Operating temperature	-25 to +70℃
Rated voltage	2.5VDC
Surge voltage	3.0VDC
Capacitance tolerance	-20% to +80%
Characteristics at Temperature	+70℃ |ΔC/C|≤30%, ESR≤100% time of specified value at 25℃ -25℃ |ΔC/C|≤50%, ESR≤400% time of specified value at 25℃
High Temperature load	After 1000 hours storage at +70℃±2 at 5.5V ， |ΔC/C|≤30% of the initial measured value, ESR≤200% of the initial specified value
Humidity Resistance	After +40℃±2，90~95%RH，240 hour |ΔC/C|≤30% of the initial measured value, IL≤200% of the initial specified value,ESR≤4 time of the initial specified value

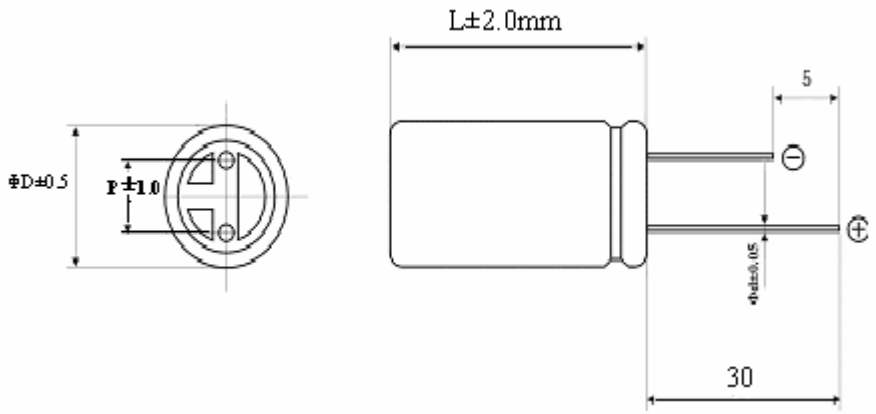

Part Number	Rated Capacitance	Operating Voltage	ESR 1HKZ (MΩ)	Size (ØD±0.5mm * L±1.0,mm	P ± 1.0(mm)	Ø d (mm)
TS12S-M-2R5-704	**0.7F**	2.5V	800	Ø8x13	3.5	0.6
TS12S-M-2R5-104	**1.0F**	2.5V	600	Ø8x13	3.5	0.6
TS12S-M-2R5-205	**2.0F**	2.5V	300	Ø10x20	4.5	0.6
TS12S-M-2R5-305	**3.0F**	2.5V	200	Ø8x20	3.5	0.6
TS12S-M-2R5-335	**3.3F**	2.5V	200	Ø10x20	4.5	0.6
TS12S-M-2R5-475	**4.7F**	2.5V	150	Ø13x21	4.5	0.6
TS12S-M-2R5-805	**8.0F**	2.5V	100	Ø13x21	4.5	0.6

Can make up to 2.7V, please send us e-mail if you have any special request.

Note: Specification are subject to change without notice. For more detail and update, please visit our website.

Suntan® Technology Company Limited Website: www.suntan.com.hk Email: info@suntan.com.hk Tel: (852) 8202 8782 Fax: (852) 8208 6246